EZCast Pro Box II Spec

Model: B10

Rev. 1.02

Revision	History	Date
V1.00	Initial Release	2019/Sep.
V1.01	DC and Miscellaneous Change	2019/Dec.
V1.02	Rare bayface correction	2020/Mar.

Introduction

EZCast Pro Box II B10 is our most powerful wireless display receiver in order to bring you completed WiFi display capability. It integrates dual band 2.4Ghz and 5Ghz WiFi module and dual high sensitivity antennas. We've developed completed apps on broad OS platforms, and it's compatible with latest Airplay, Miracast and Chromecast standards.

The EZCast Pro Box II B10 also has the capability for split display to allow max. 4 different sources to cast, including airplay. Not only the multiple functions EZCast Pro app, it also supports our new powerful broadcasting app "ProCast", allowing you to cast your screen to multiple EZCast Pro II series.

HW environment:

-TV, Monitor or Projector with HDMI 1.4a input
-DC 5V/2A, with type-c USB connector

SW environment for app:

-iOS: 10 and above
-Android: Android 5.0 and above
-MacOS: macOS 10.12 and after
-Windows: Windows 7 and above
-ChromeOS
*specifications are subject to change without notice due to different OS platform regulations.

B10 Spec:

CPU	ARM based RISC
DRAM	DDR3 1GB
Flash	NAND Flash 256MB
Output Resolution	• 4096x2160@24hz • 3840x2160@30hz • 3840x2160@25hz • 3840x2160@24hz • 1920x1080@60Hz • 1280x720@60hz • 1920x1080@50Hz • 1920x1080@24Hz • 1280x720@50hz
I/O	• HDMI out (HDMI1.4) • USB type A Female (USB 2.0) • DC 5V • Ethernet
WiFi	802.11ac 2T2R, max. bandwidth 866Mbps (5Ghz)
WiFi Frequency	2.4Ghz: 2.400 GHz~2.497

	5Ghz: 5.150Ghz~5.825Ghz
Power	DC 5V, 2A
HDCP	HDCP1.4
Ethernet	10/100/1000M, support POE
LED Indication	Power, Ethernet, WiFi status, USB
Key	Reset button
Power Consumption	● Standby: 5W approx. ● Casting: 10W approx.
Working Temp.	0~40°C
Storage Temp.	-20~70°C

Dimension:

80*120*25 (Antenna excluded)

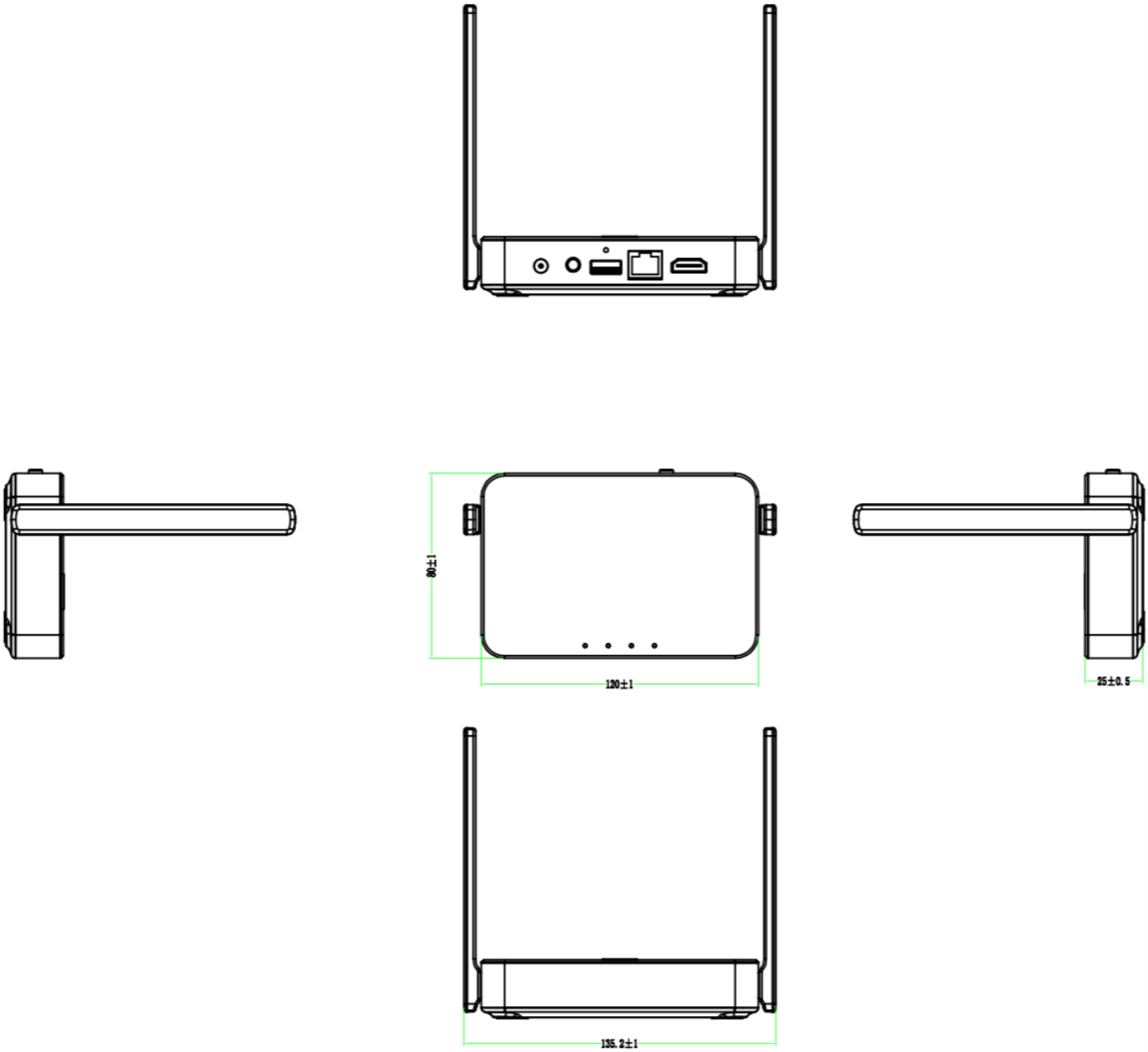

Installation Guide:

1. Connect Power with the adaptor
2. Connect HDMI with HDMI port with the projectors or displays.

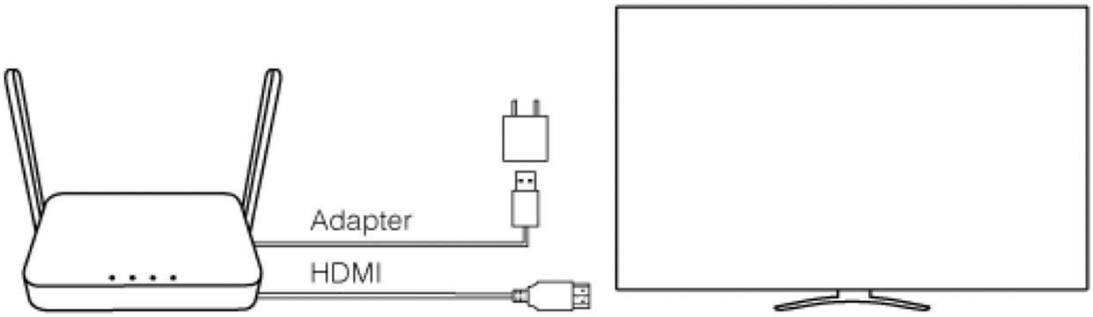

*Notice: Pro Box 2 is compatible with VESA mounting screw holes. Please use the 5x5 bracket and M4 screws.

*Due to WiFi signal requires enough space, please DO NOT block the antenna or mount it behind of TV/Panel.

I/O Descriptions:

EZCast Pro Box II	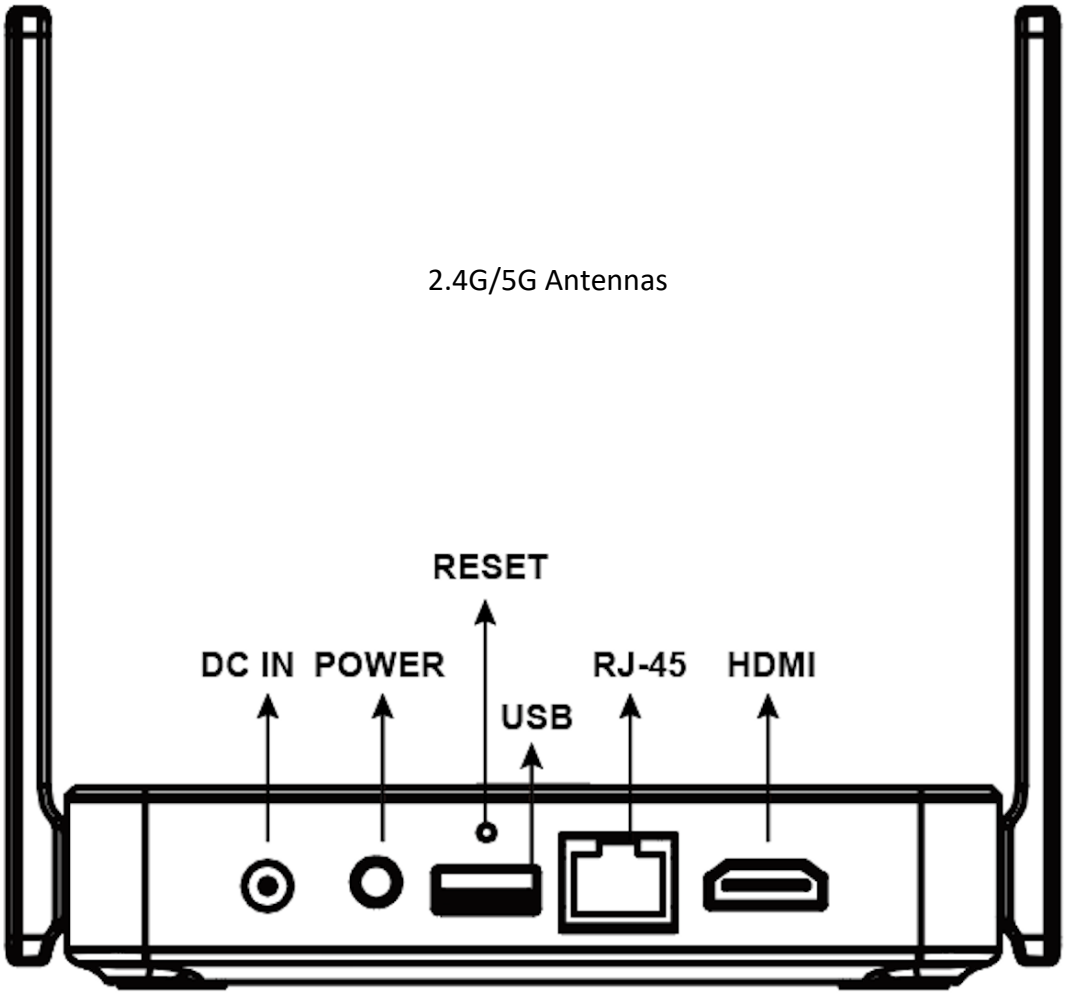

LED Indication:

EZCast Pro Box II	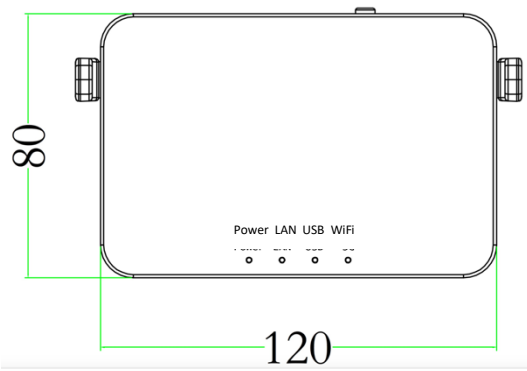

WiFi RF Parameters (2.4Ghz):

Feature	Description
WLAN Standard	IEEE 802.11a/b/g/n/ac WiFi compliant
Frequency Range	2.400 GHz ~ 2.497 GHz (2.4 GHz ISM Band)
Number of Channels	2.4GHz: Ch1 ~ Ch14
Output Power	802.11b /11Mbps : 16 dBm ± 1.5 dB @ EVM ≤ -9dB
	802.11g /54Mbps : 15 dBm ± 1.5 dB @ EVM ≤ -25dB
	802.11n /MCS7 : 14 dBm ± 1.5 dB @ EVM ≤ -28dB
	802.11ac/256-QAM(R=3/4) : 13 dBm ± 1.5 dB @ EVM ≤ -30dB
	802.11ac/256-QAM(R=5/6) : 11 dBm ± 1.5 dB @ EVM ≤ -32dB
SISO Receive Sensitivity (11b,20MHz) @8% PER	- 1Mbps PER @ -92 dBm, typical
	- 2Mbps PER @ -90 dBm, typical
	- 5.5Mbps PER @ -87 dBm, typical
	- 11Mbps PER @ -85 dBm, typical
SISO Receive Sensitivity (11g,20MHz) @10% PER	- 6Mbps PER @ -89 dBm, typical
	- 9Mbps PER @ -88 dBm, typical
	- 12Mbps PER @ -87 dBm, typical
	- 18Mbps PER @ -84 dBm, typical
	- 24Mbps PER @ -81 dBm, typical
	- 36Mbps PER @ -78 dBm, typical
	- 48Mbps PER @ -73 dBm, typical
	- 54Mbps PER @ -71 dBm, typical
MIMO Receive Sensitivity (11g,20MHz) @10% PER	- 6Mbps PER @ -91 dBm, typical
	- 9Mbps PER @ -90 dBm, typical
	- 12Mbps PER @ -89 dBm, typical
	- 18Mbps PER @ -87 dBm, typical
	- 24Mbps PER @ -84 dBm, typical
	- 36Mbps PER @ -81 dBm, typical
	- 48Mbps PER @ -76 dBm, typical
	- 54Mbps PER @ -74 dBm, typical
SISO Receive Sensitivity (11n,20MHz) @10% PER	- MCS=0 PER @ -89 dBm, typical
	- MCS=1 PER @ -86 dBm, typical
	- MCS=2 PER @ -84 dBm, typical
	- MCS=3 PER @ -80 dBm, typical

	- MCS=4 PER @ -77 dBm, typical
	- MCS=5 PER @ -72 dBm, typical
	- MCS=6 PER @ -71 dBm, typical
	- MCS=7 PER @ -69 dBm, typical
MIMO Receive Sensitivity (11n,20MHz) @10% PER	- MCS=0 PER @ -90 dBm, typical
	- MCS=1 PER @ -89 dBm, typical
	- MCS=2 PER @ -87 dBm, typical
	- MCS=3 PER @ -84 dBm, typical
	- MCS=4 PER @ -80 dBm, typical
	- MCS=5 PER @ -75 dBm, typical
	- MCS=6 PER @ -73 dBm, typical
	- MCS=7 PER @ -72 dBm, typical
	- MCS=8 PER @ -87 dBm, typical
	- MCS=15 PER @ -68 dBm, typical
SISO Receive Sensitivity (11ac,20MHz) @10% PER	- MCS=0, NSS1 PER @ -88 dBm, typical
	- MCS=1, NSS1 PER @ -85 dBm, typical
	- MCS=2, NSS1 PER @ -84 dBm, typical
	- MCS=3, NSS1 PER @ -80 dBm, typical
	- MCS=4, NSS1 PER @ -77 dBm, typical
	- MCS=5, NSS1 PER @ -72 dBm, typical
	- MCS=6, NSS1 PER @ -70 dBm, typical
	- MCS=7, NSS1 PER @ -69 dBm, typical
	- MCS=8, NSS1 PER @ -66 dBm, typical
MIMO Receive Sensitivity (11ac,20MHz) @10% PER	- MCS=0, NSS1 PER @ -88 dBm, typical
	- MCS=1, NSS1 PER @ -87 dBm, typical
	- MCS=2, NSS1 PER @ -86 dBm, typical
	- MCS=3, NSS1 PER @ -83 dBm, typical
	- MCS=4, NSS1 PER @ -80 dBm, typical
	- MCS=5, NSS1 PER @ -75 dBm, typical
	- MCS=6, NSS1 PER @ -74 dBm, typical
	- MCS=7, NSS1 PER @ -72 dBm, typical
	- MCS=8, NSS1 PER @ -68 dBm, typical
	- MCS=0, NSS2 PER @ -88 dBm, typical
	- MCS=8, NSS2 PER @ -64 dBm, typical
Maximum Input Level	802.11b : -10 dBm
	802.11g/n : -20 dBm
Antenna Reference	Small antennas with 0~2 dBi peak gain

WiFi RF Parameters (5Ghz):

Feature	Description
WLAN Standard	IEEE 802.11ac 2x2, WiFi compliant
Frequency Range	4.900 GHz ~ 5.845 GHz (5.0 GHz ISM Band)
Number of Channels	5.0GHz：Please see the table1
Output Power	802.11a /54Mbps : 13 dBm ± 1.5 dB @ EVM ≤ -25dB 802.11n /MCS7 : 12 dBm ± 1.5 dB @ EVM ≤ -28dB 802.11ac /MCS9 : 10 dBm ± 1.5 dB @ EVM ≤ -32dB
SISO Receive Sensitivity (11a,20MHz) @10% PER	- 6Mbps PER @ -88 dBm, typical - 9Mbps PER @ -87 dBm, typical - 12Mbps PER @ -86 dBm, typical - 18Mbps PER @ -83 dBm, typical - 24Mbps PER @ -80 dBm, typical - 36Mbps PER @ -77 dBm, typical - 48Mbps PER @ -72 dBm, typical - 54Mbps PER @ -70 dBm, typical
MIMO Receive Sensitivity (11a,20MHz) @10% PER	- 6Mbps PER @ -90 dBm, typical - 9Mbps PER @ -89 dBm, typical - 12Mbps PER @ -88 dBm, typical - 18Mbps PER @ -86 dBm, typical - 24Mbps PER @ -83 dBm, typical - 36Mbps PER @ -80 dBm, typical - 48Mbps PER @ -75 dBm, typical - 54Mbps PER @ -71 dBm, typical
SISO Receive Sensitivity (11n,20MHz) @10% PER	- MCS=0 PER @ -88 dBm, typical - MCS=1 PER @ -85 dBm, typical - MCS=2 PER @ -83 dBm, typical - MCS=3 PER @ -80 dBm, typical - MCS=4 PER @ -76 dBm, typical - MCS=5 PER @ -71 dBm, typical - MCS=6 PER @ -70 dBm, typical - MCS=7 PER @ -68 dBm, typical
MIMO Receive Sensitivity (11n,20MHz) @10% PER	- MCS=0 PER @ -89 dBm, typical - MCS=1 PER @ -88 dBm, typical - MCS=2 PER @ -86 dBm, typical - MCS=3 PER @ -83 dBm, typical

	- MCS=4 PER @ -79 dBm, typical
	- MCS=5 PER @ -74 dBm, typical
	- MCS=6 PER @ -73 dBm, typical
	- MCS=7 PER @ -71 dBm, typical
	- MCS=8 PER @ -88 dBm, typical
	- MCS=15 PER @ -68 dBm, typical
SISO Receive Sensitivity (11n,40MHz) @10% PER	- MCS=0 PER @ -85 dBm, typical
	- MCS=1 PER @ -82 dBm, typical
	- MCS=2 PER @ -80 dBm, typical
	- MCS=3 PER @ -77 dBm, typical
	- MCS=4 PER @ -73 dBm, typical
	- MCS=5 PER @ -69 dBm, typical
	- MCS=6 PER @ -67 dBm, typical
	- MCS=7 PER @ -66 dBm, typical
MIMO Receive Sensitivity (11n,40MHz) @10% PER	- MCS=0 PER @ -87 dBm, typical
	- MCS=1 PER @ -85 dBm, typical
	- MCS=2 PER @ -83 dBm, typical
	- MCS=3 PER @ -80 dBm, typical
	- MCS=4 PER @ -76 dBm, typical
	- MCS=5 PER @ -72 dBm, typical
	- MCS=6 PER @ -70 dBm, typical
	- MCS=7 PER @ -69 dBm, typical
	- MCS=8 PER @ -85 dBm, typical
	- MCS=15 PER @ -66 dBm, typical
SISO Receive Sensitivity (11ac,20MHz) @10% PER	- MCS=0, NSS1 PER @ -86 dBm, typical
	- MCS=1, NSS1 PER @ -84 dBm, typical
	- MCS=2, NSS1 PER @ -82 dBm, typical
	- MCS=3, NSS1 PER @ -79 dBm, typical
	- MCS=4, NSS1 PER @ -75 dBm, typical
	- MCS=5, NSS1 PER @ -70 dBm, typical
	- MCS=6, NSS1 PER @ -69 dBm, typical
	- MCS=7, NSS1 PER @ -68 dBm, typical
	- MCS=8, NSS1 PER @ -64 dBm, typical
MIMO Receive Sensitivity (11ac,20MHz) @10% PER	- MCS=0, NSS1 PER @ -88 dBm, typical
	- MCS=1, NSS1 PER @ -87 dBm, typical
	- MCS=2, NSS1 PER @ -85 dBm, typical
	- MCS=3, NSS1 PER @ -82 dBm, typical
	- MCS=4, NSS1 PER @ -78 dBm, typical

	- MCS=5, NSS1 PER @ -73 dBm, typical
	- MCS=6, NSS1 PER @ -72 dBm, typical
	- MCS=7, NSS1 PER @ -71 dBm, typical
	- MCS=8, NSS1 PER @ -67 dBm, typical
	- MCS=0, NSS2 PER @ -87 dBm, typical
	- MCS=8, NSS2 PER @ -63 dBm, typical
SISO Receive Sensitivity (11ac,40MHz) @10% PER	- MCS=0, NSS1 PER @ -84 dBm, typical
	- MCS=1, NSS1 PER @ -81 dBm, typical
	- MCS=2, NSS1 PER @ -79 dBm, typical
	- MCS=3, NSS1 PER @ -76 dBm, typical
	- MCS=4, NSS1 PER @ -73 dBm, typical
	- MCS=5, NSS1 PER @ -68 dBm, typical
	- MCS=6, NSS1 PER @ -67 dBm, typical
	- MCS=7, NSS1 PER @ -66 dBm, typical
	- MCS=8, NSS1 PER @ -61 dBm, typical
	- MCS=9, NSS1 PER @ -60 dBm, typical
MIMO Receive Sensitivity (11ac,40MHz) @10% PER	- MCS=0, NSS1 PER @ -86 dBm, typical
	- MCS=1, NSS1 PER @ -84 dBm, typical
	- MCS=2, NSS1 PER @ -82 dBm, typical
	- MCS=3, NSS1 PER @ -79 dBm, typical
	- MCS=4, NSS1 PER @ -76 dBm, typical
	- MCS=5, NSS1 PER @ -71 dBm, typical
	- MCS=6, NSS1 PER @ -70 dBm, typical
	- MCS=7, NSS1 PER @ -69 dBm, typical
	- MCS=8, NSS1 PER @ -64 dBm, typical
	- MCS=9, NSS1 PER @ -63 dBm, typical
	- MCS=0, NSS2 PER @ -84 dBm, typical
	- MCS=9, NSS2 PER @ -60 dBm, typical
SISO Receive Sensitivity (11ac,80MHz) @10% PER	- MCS=0, NSS1 PER @ -81 dBm, typical
	- MCS=1, NSS1 PER @ -78 dBm, typical
	- MCS=2, NSS1 PER @ -76 dBm, typical
	- MCS=3, NSS1 PER @ -72 dBm, typical
	- MCS=4, NSS1 PER @ -69 dBm, typical
	- MCS=5, NSS1 PER @ -66 dBm, typical
	- MCS=6, NSS1 PER @ -64 dBm, typical
	- MCS=7, NSS1 PER @ -62 dBm, typical
	- MCS=8, NSS1 PER @ -58 dBm, typical
	- MCS=9, NSS1 PER @ -56 dBm, typical

MIMO Receive Sensitivity (11ac,80MHz) @10% PER	- MCS=0, NSS1 PER @ -82 dBm, typical - MCS=1, NSS1 PER @ -81 dBm, typical - MCS=2, NSS1 PER @ -79 dBm, typical - MCS=3, NSS1 PER @ -75 dBm, typical - MCS=4, NSS1 PER @ -72 dBm, typical - MCS=5, NSS1 PER @ -69 dBm, typical - MCS=6, NSS1 PER @ -67 dBm, typical - MCS=7, NSS1 PER @ -65 dBm, typical - MCS=8, NSS1 PER @ -61 dBm, typical - MCS=9, NSS1 PER @ -60 dBm, typical - MCS=0, NSS2 PER @ -80 dBm, typical - MCS=9, NSS2 PER @ -56 dBm, typical
Maximum Input Level	802.11a/n : -30 dBm
Antenna Reference	Small antennas with 0~2 dBi peak gain

5Ghz WiFi Channel Table:

Band range	Operating Channel Numbers	Channel center frequencies(MHz)
5180 MHz~5240MHz	36	5180
	40	5200
	44	5220
	48	5240
5260MHz~5320MHz	52	5260
	56	5280
	60	5300
	64	5320
5550MHz~5700MHz	100	5500
	104	5520
	108	5540
	112	5560
	116	5580
	120	5600
	124	5620
	128	5640
	132	5660
	136	5680
	140	5700
5745MHz~5825MHz	149	5745
	153	5765
	157	5785
	161	5805
	165	5825

Port usage

- **Airplay:**
  - Port 7000/7001/7100 for TCP
  - Port 5353 for UDP
- **EZCast Protocol:**
  - Port 2425
  - Port 63630
- **EZCast Http server:**
  - Port 80
  - Port 8080
- **ChromeCast mirror:**
  - Port 80/443/8008/8009 for TCP
  - Port 53/1900/5353 for UDP
- **FW OTA:**
  - Port 80
  - Port 443
- **DLNA:**
  - Port 1900 for UDP
  - Port 2869 for TCP

I

Icons Description for Function & Link Status

**** Outbound link can select only one of Wi-Fi and RJ45 wire line (LAN).***

	Airplay activated after web setting. (Default is off)
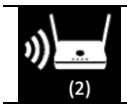	The number showed total Devices are linked to Pro Box II.
	RJ45 wire line disconnected.
	Shift in 3, which means “building the connection”.
	RJ45 wire line connected and IP acquired
	IP conflict or other network error.
	Outbound Wi-Fi disconnected.
	Shift in 3, outbound Wi-Fi is connecting.
	Outbound Wi-Fi connected with the router name shown underline.
	Wi-Fi connection Fail, Invalid password or other Errors

SW Features:

Operation Mode	Link and Offline operation
Control Mode	Admin, Host and Guest
Screen Mirror	• EZCast Pro App for Win/Mac: Mirror/Extension mode • Airplay: Mirror, Extension(macOS only) • Miracast for Windows and Android: Mirror, Extension(windows only)
Multimedia Cast	Photo/Video cast
Office Viewer	MS-Office and PDF
Editing Tool	Sketch tool

Web Browser	Embedded browser
Cloud Video	EZChannel for video enterance
Content Broadcast	Airview to broadcast current display
Camera	Live camera to support fron and rear camera
Split Screen	1, 2, or 4 displays
Advanced	-Administrator login -WPA enterprise CA -Conference control for users and display positions -Link status check -AirView on/off switch -AirSetup -Reset to default
EZNote	Note taking and editor
EZKeep	EZNote to be stored on Cloud
EZBoard	Cross platform interactive board
Privacy	Preferred device setting, Do not disturb mode and auto-allow settings
Others	Comments and Store
ProCast (Multiple device broadcast)	Single PC to multiple devices screen mirror (Windows and macOS only)

*Above features are subject to change without notice due to different OS platform regulations.

©2017 Actions Microelectronics Co., Ltd. All right reserved. Quattro Pod or Quattro are trademarks of Actions Microelectronic Co., Ltd., registered in China and other countries. Other product and company names mentioned herein may be trademarks other respective companies.

FCC STATEMENT

1. This device complies with Part 15 of the FCC Rules. Operation is subject to the following two conditions:

(1) This device may not cause harmful interference.

(2) This device must accept any interference received, including interference that may cause undesired operation.

2. Changes or modifications not expressly approved by the party responsible for compliance could void the user's authority to operate the equipment.

NOTE: This equipment has been tested and found to comply with the limits for a Class B digital device, pursuant to Part 15 of the FCC Rules. These limits are designed to provide reasonable protection against harmful interference in a residential installation.

This equipment generates uses and can radiate radio frequency energy and, if not installed and used in accordance with the instructions, may cause harmful interference to radio communications. However, there is no guarantee that interference will not occur in a particular installation. If this equipment does cause harmful interference to radio or television reception, which can be determined by turning the equipment off and on, the user is encouraged to try to correct the interference by one or more of the following measures:

Reorient or relocate the receiving antenna.

Increase the separation between the equipment and receiver.

Connect the equipment into an outlet on a circuit different from that to which the receiver is connected.

Consult the dealer or an experienced radio/TV technician for help.

FCC Radiation Exposure Statement

This equipment complies with FCC radiation exposure limits set forth for an uncontrolled environment. This equipment should be installed and operated with minimum distance 20cm between the radiator & your body

本產品符合國家通訊傳撥委員會(NCC)之規範：

低功率電波輻射性電機管理辦法

第十二條 經型式認證合格之低功率射頻電機，非經許可，公司、商號或使用者均不得擅自變更頻率、加大功率或變更原設計之特性及功能。

第十四條 低功率射頻電機之使用不得影響飛航安全及干擾合法通信；經發現有干擾現象時，應改善至無干擾時方得繼續使用。前項合法通信，指依電信法規定作業之無線電通信。低功率射頻電機須忍受合法通信或工業、科學及醫療用電波輻射性電機設備之干擾。

＊您可以在官網下載到最新版完整手冊以及相關品問題：www.iezvu.com

©2017 Actions Microelectronics Co., Ltd. : Quattro 或 Quattro Pod 為 Actions Microelectronic Co., Ltd., 炬力北方股份有限公司在大陸地區與其他國家註冊之商標，說明書中提到的相關產品名稱或商標則屬於相對應之該公司