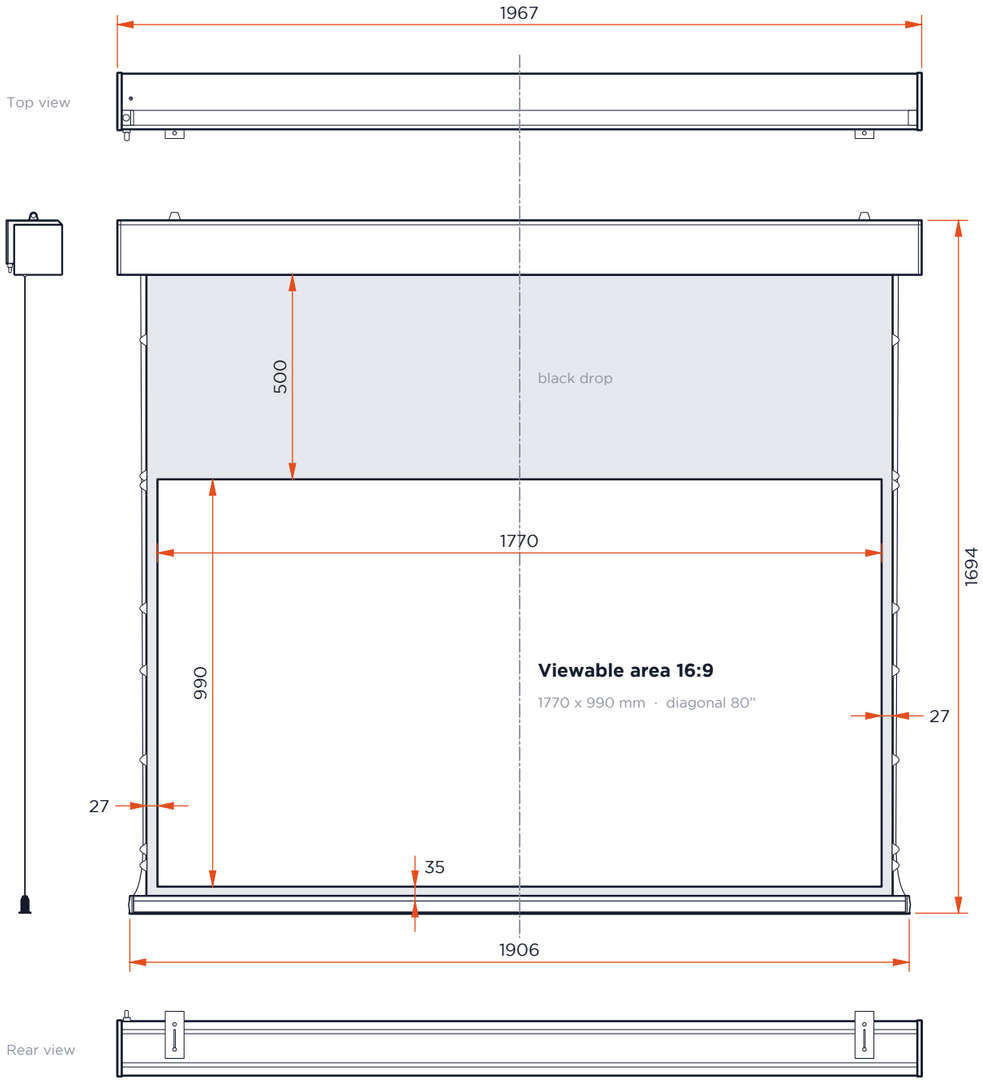

TOP VIEW · FRONT VIEW · SIDE VIEW · REAR VIEW SCALE 1:15

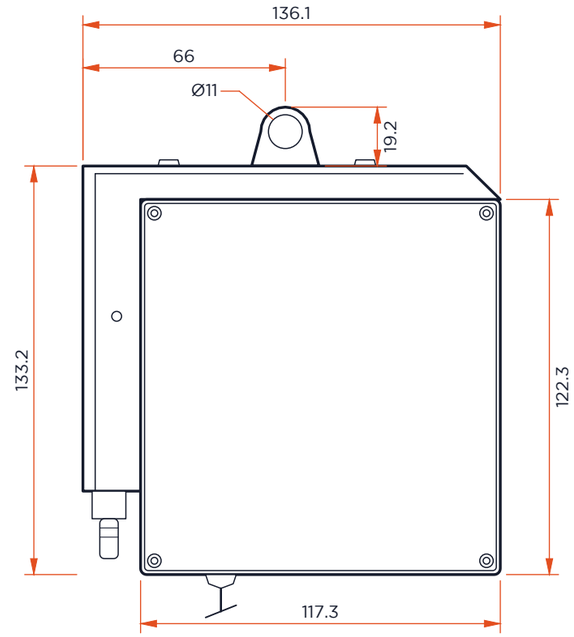

HOUSING PROFILE

SCALE 1:2

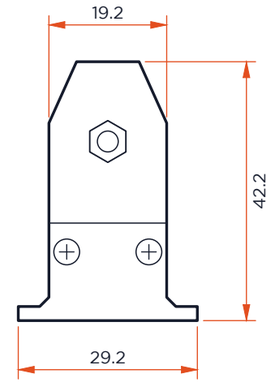

WEIGHT BAR

SCALE 1:1

NOTES

1. All dimensions in mm.
2. Viewable area 1770 x 990 mm, 16:9 format, 80" diagonal.
3. Black border 27 mm left/right, 35 mm at the bottom, black drop 500 mm.
4. Housing L x D x H: 1967 x 117.3 x 122.3 mm.
5. Weight 14.1 kg.
6. Power cord 1700 mm, cable connection on the left at the rear.
7. Subject to technical changes and errors.

celexon™

TECHNICAL DRAWING

Product dimension sheet

celexon.co.uk

Description

celexon DARKVISION ALR Premium Plus Screen Electric Tension 177 x 99 cm - 80"

Item no. (SKU)	Unit	Scale
1000036980	**mm**	**1:15 / 1:2 / 1:1**
Date	Paper size	Sheet
16/11/2026	A3	1 / 1

© celexon – Not to be passed on or reproduced without permission.