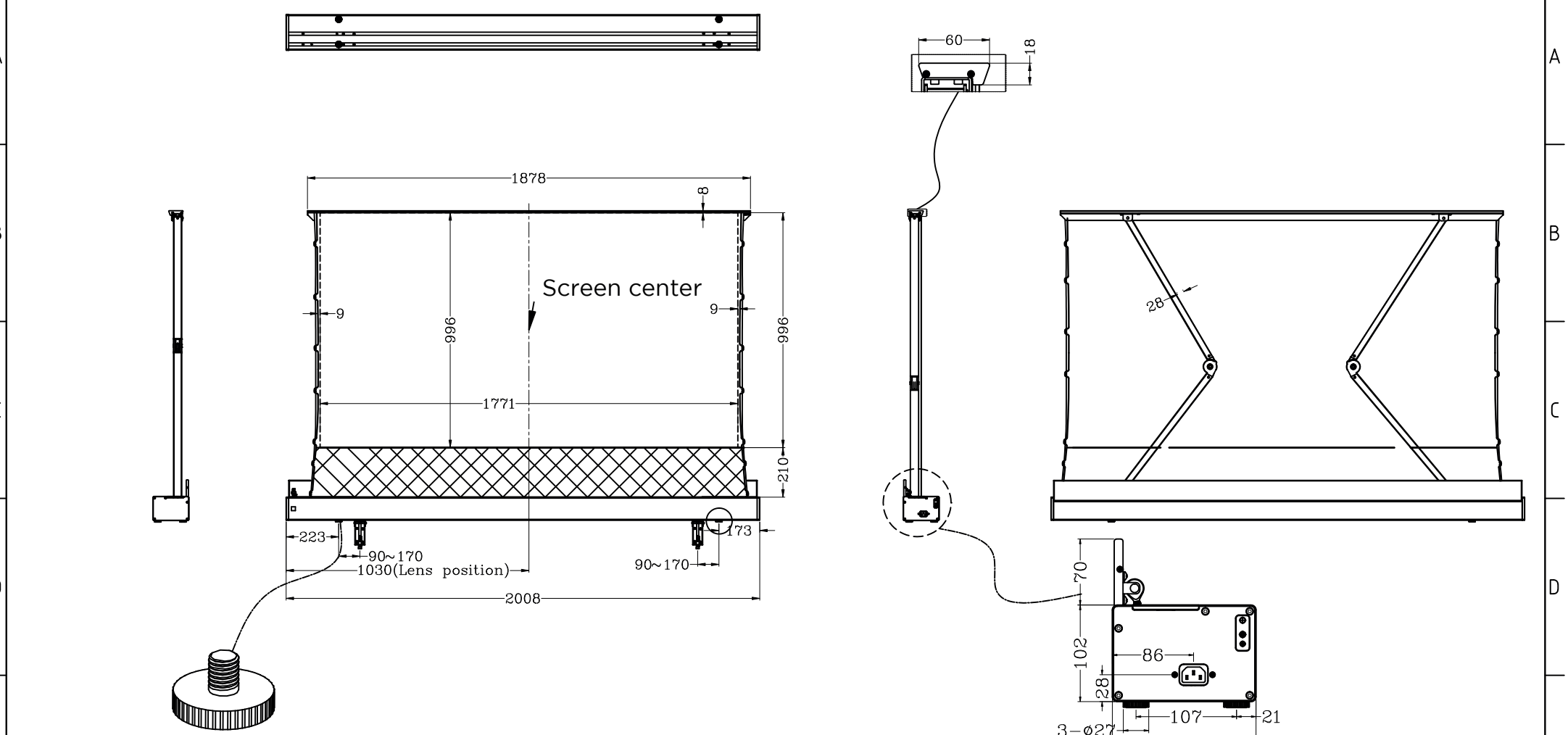

Two installation methods

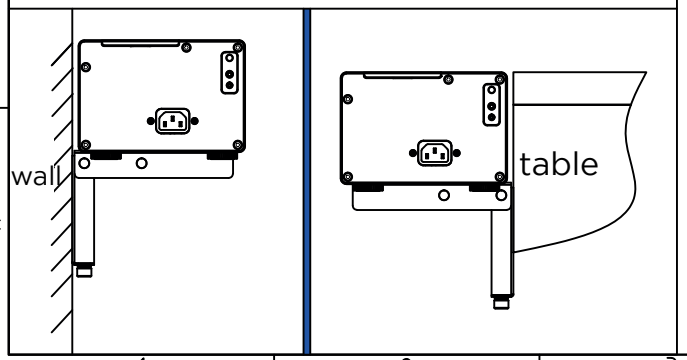

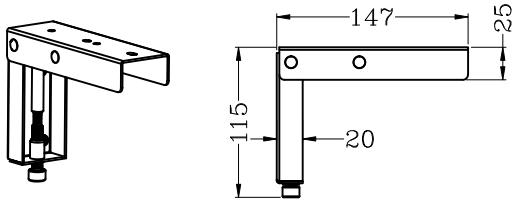

Optional Matching

Model:	celexon CLR HomeCinema Plus UST High Contrast Electric Floor Screen 80“
Measurement:	mm